SPEC SHEET

Lexie 18" Globe Lantern

Item # CHC 5516PN

Designer: Chapman & Myers

Height: 22.25"
Width: 18"
Canopy: 6" Round
Finishes: AI, BZ, GI, PN
Socket: 4 - E12 Candelabra
Wattage: 4 - 6.5 LED B11
Weight: 11 Pounds

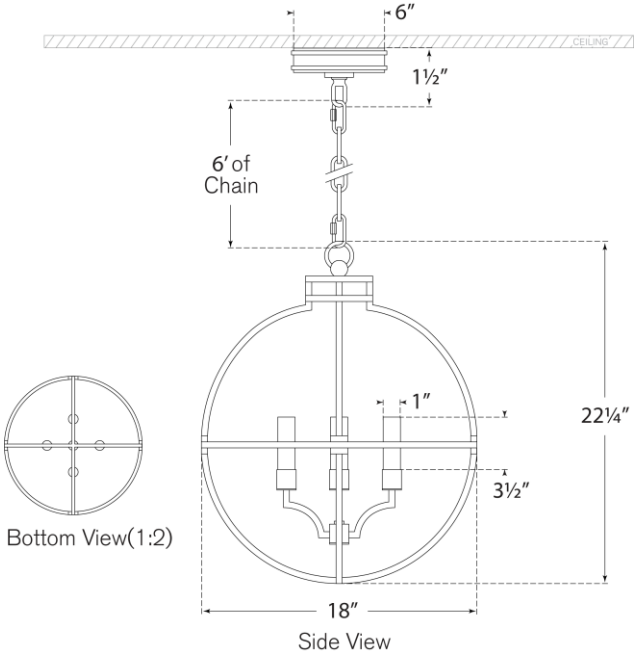

VISUAL COMFORT & CO.

DAMP LED 4